THIS DRAWING IS THE PROPERTY OF ANALOG DEVICES INC. IT IS NOT TO BE REPRODUCED OR COPIED, IN WHOLE OR IN PART, OR USED IN FURNISHING INFORMATION TO OTHERS, OR FOR ANY OTHER PURPOSE DETRIMENTAL TO THE INTERESTS OF ANALOG DEVICES.
THE EQUIPMENT SHOWN HEREON MAY BE PROTECTED BY PATENTS OWNED OR CONTROLLED BY ANALOG DEVICES.

RELAY CONTROL CHART

CONTROL	CODE	DEVICE	FUNCTION	CONNECTOR

JUMPER TABLE

JP#	ON	OFF
1		
2		
3		
4		
5		

* SEE ASSEMBLY INSTRUCTIONS

REVISIONS

REV	DESCRIPTION	DATE	APPROVED
A	INITIAL RELEASE	21JUL21	A.UY
B	AS PER ECR-109977	15SEP22	A.UY
C	AS PER ECR-111700	24NOV22	A.UY

EVAL-CN0359-EBZ

FULLY AUTOMATIC, HIGH PERFORMANCE CONDUCTIVITY MEASUREMENT SYSTEM

SHEET 1 : FRONT PAGE
SHEET 2 : ADUCM360 MICROCONTROLLER AND LCD MODULE CIRCUITS
SHEET 3 : POWER SUPPLY CIRCUITS AND EXCITATION VOLTAGE SOURCE
SHEET 4 : CONDUCTIVITY MEASUREMENT FRONT-END
SHEET 5 : TRACK AND HOLD CIRCUITS

P.O SPEC.	BK/BD SPEC.	SOCKET OEM	OEM PART#	HANDLER

TEMPLATE ENGINEER -	DATE	SCHEMATIC
HARDWARE SERVICES M.VALE	21JUL21	HW TYPE : Customer Evaluation Z Product(s): ADuCM362 : AD8253
HARDWARE SYSTEMS -		PACKAGE : LeadCount-lead BodySize PackageType-family : Pitch-pitch StyleVendor Style
TEST ENGINEER -		
COMPONENT ENGINEER M.YAN	21JUL21	<User Define> <User Define> <User Define>
TEST PROCESS -		
HARDWARE RELEASE K.JABATAN	21JUL21	
DESIGNER G.GARCIA	21JUL21	MASTER PROJECT TEMPLATE: TBD; TESTER TEMPLATE: no_template
PTD ENGINEER A.UY	21JUL21	UNLESS OTHERWISE SPECIFIED DIMENSIONS ARE IN INCHES
CHECKER -		TOLERANCES: DECIMALS X.XX +-0.010 X.XXX +-0.005; FRACTIONS +-1/32; ANGLES +-2

ANALOG DEVICES

DRAWING NO. 02_059785 REV. C

SIZE D | SCALE 1:1 | CODE ID NO. CodeID | SHEET 1 OF 5

REVISIONS			
REV	DESCRIPTION	DATE	APPROVED

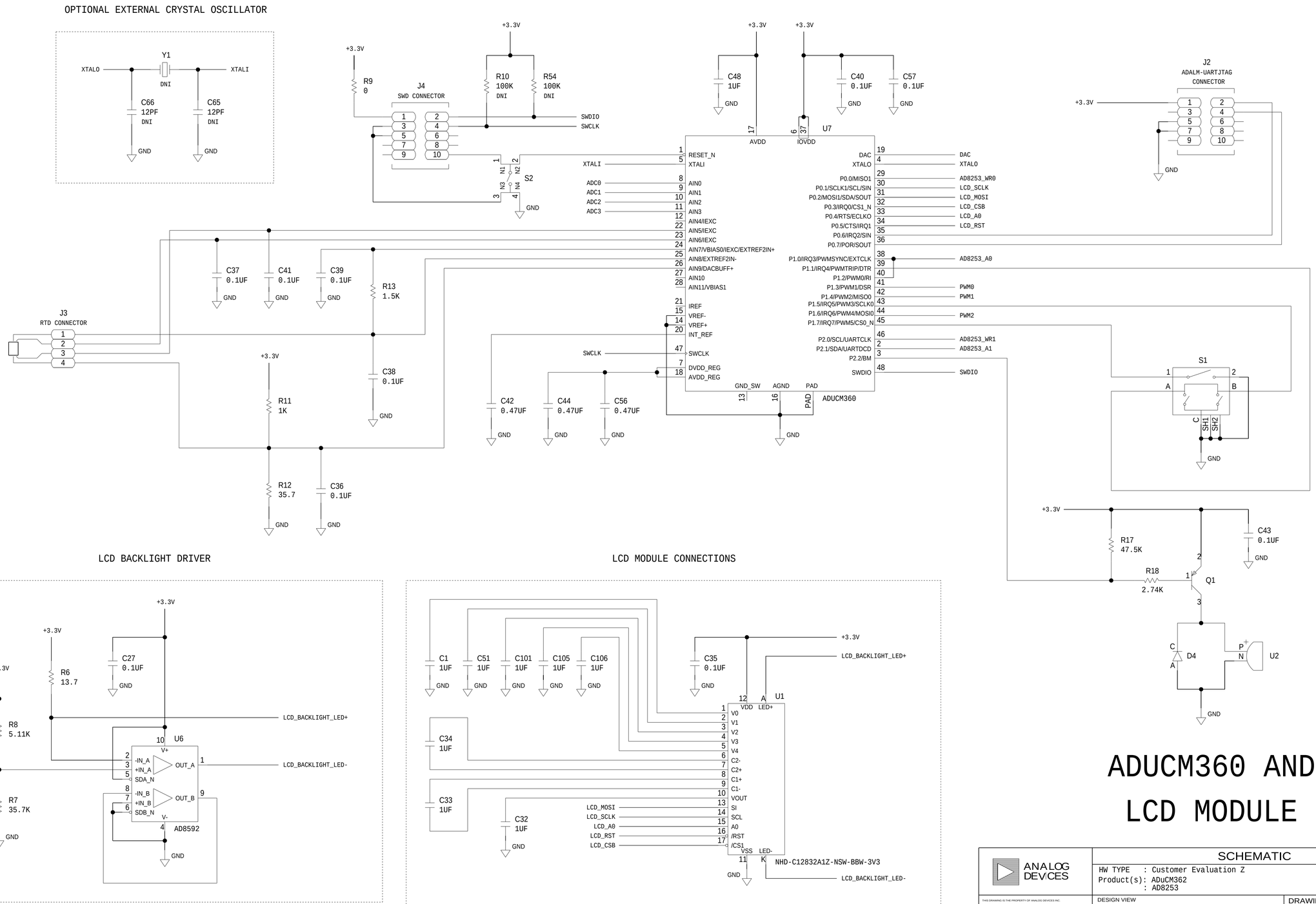

ADUCM360 AND LCD MODULE

ANALOG DEVICES

THIS DRAWING IS THE PROPERTY OF ANALOG DEVICES INC.
IT IS NOT TO BE REPRODUCED OR COPIED, IN WHOLE OR
IN PART, OR USED IN FURNISHING INFORMATION TO OTHERS,
OR FOR ANY OTHER PURPOSE DETRIMENTAL TO THE INTERESTS
OF ANALOG DEVICES.
THE EQUIPMENT SHOWN HEREON MAY BE PROTECTED BY PATENTS
OWNED OR CONTROLLED BY OWNED ANALOG DEVICES.

SCHEMATIC

HW TYPE : Customer Evaluation Z
Product(s): ADuCM362
: AD8253

DESIGN VIEW	DRAWING NO.	REV
<DESIGN_VIEW>	02_059785	C
PTD ENGINEER A.UY	SIZE D / SCALE 1:1	SHEET 2 OF 5

REVISIONS			
REV	DESCRIPTION	DATE	APPROVED

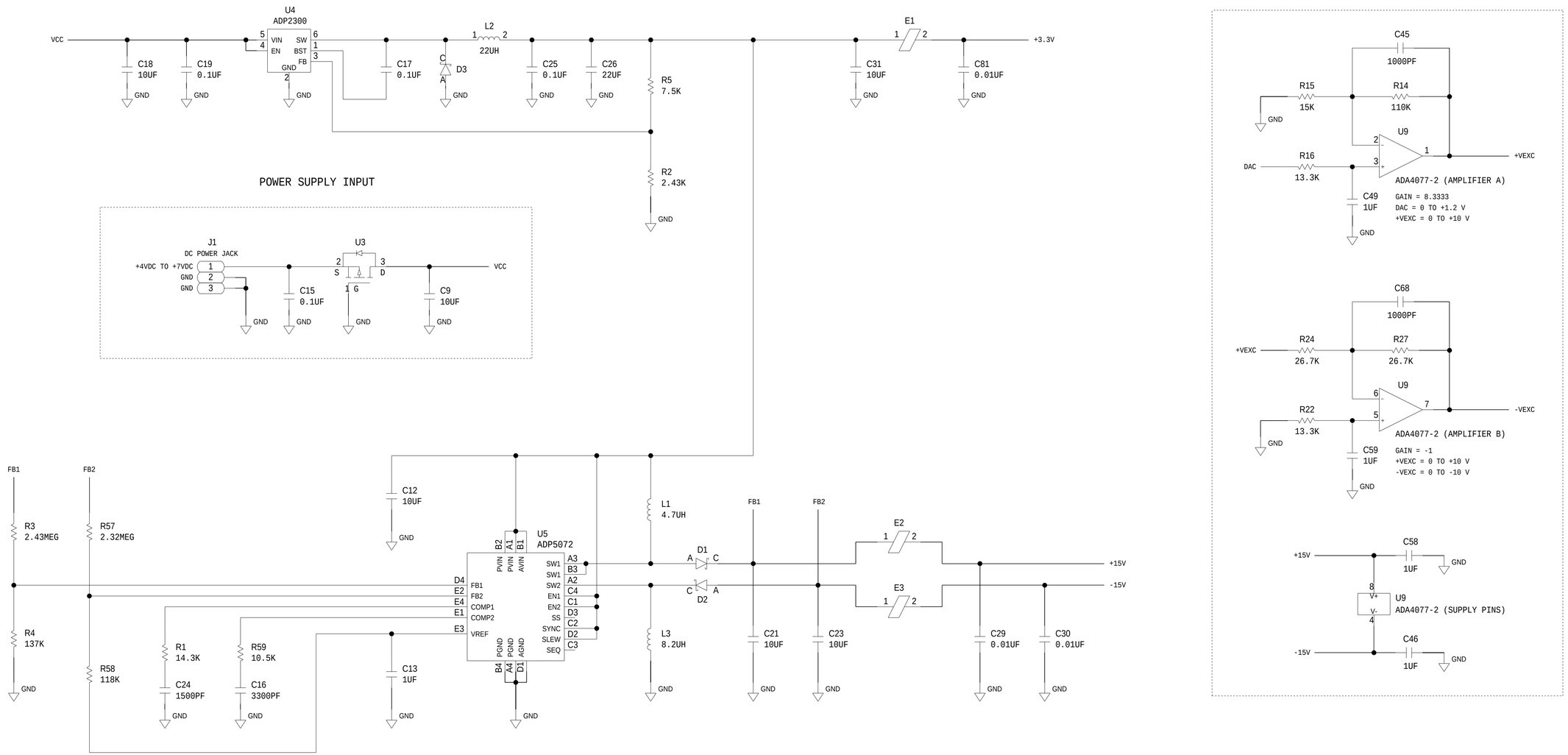

POWER SUPPLIES AND EXCITATION SOURCE

ANALOG DEVICES

THIS DRAWING IS THE PROPERTY OF ANALOG DEVICES INC.
IT IS NOT TO BE REPRODUCED OR COPIED, IN WHOLE OR
IN PART, OR USED IN FURNISHING INFORMATION TO OTHERS,
OR FOR ANY OTHER PURPOSE DETRIMENTAL TO THE INTERESTS
OF ANALOG DEVICES.
THE EQUIPMENT SHOWN HEREON MAY BE PROTECTED BY PATENTS
OWNED OR CONTROLLED BY OWNED ANALOG DEVICES.

SCHEMATIC

HW TYPE : Customer Evaluation Z
Product(s): ADuCM362
: AD8253

DESIGN VIEW	DRAWING NO.	REV
<DESIGN_VIEW>	02_059785	C

PTD ENGINEER	SIZE	SCALE	SHEET	OF
A.UY	D	1:1	3	5

REVISIONS			
REV	DESCRIPTION	DATE	APPROVED

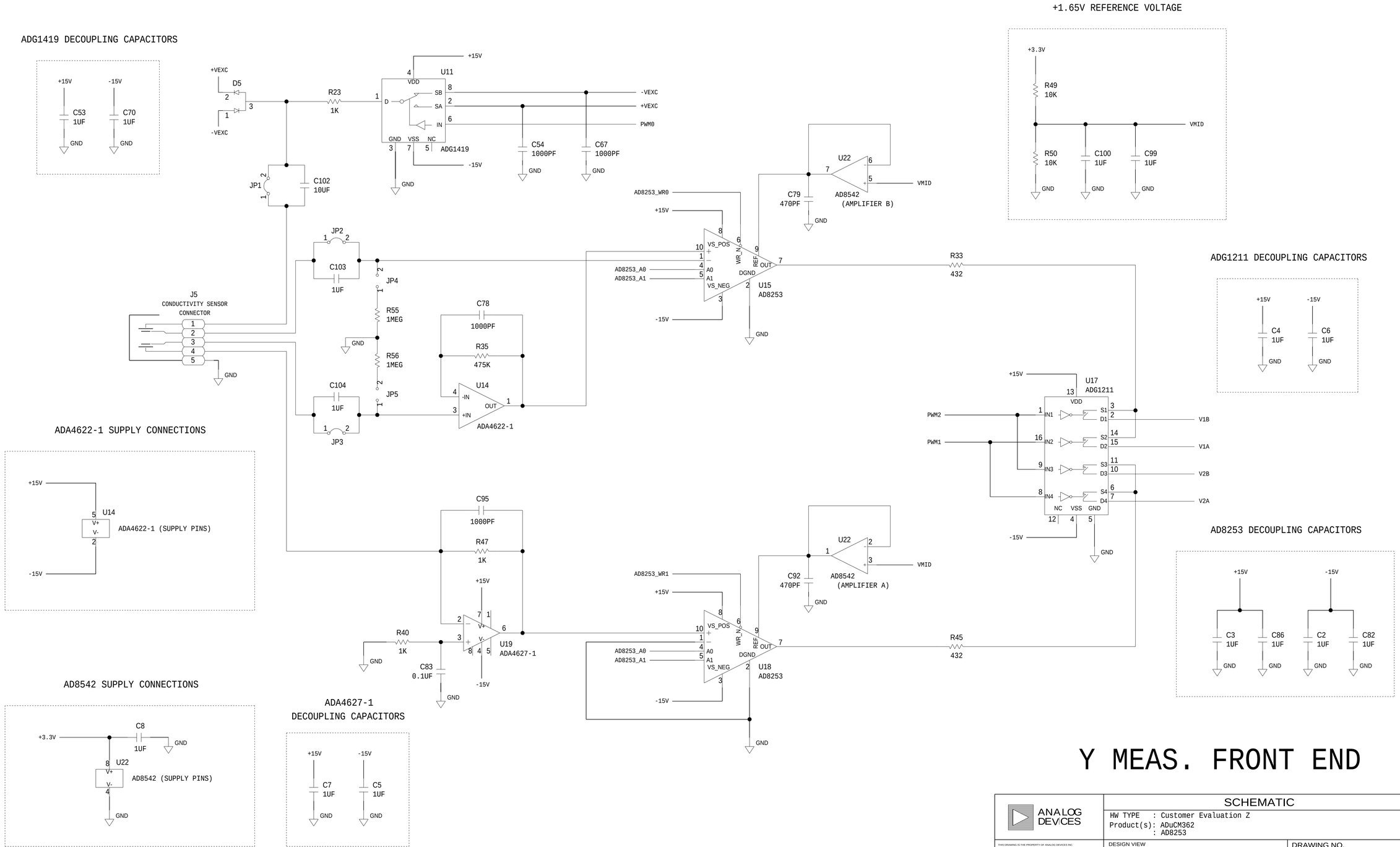

Y MEAS. FRONT END

ANALOG DEVICES

SCHEMATIC

HW TYPE : Customer Evaluation Z
Product(s): ADuCM362
: AD8253

THIS DRAWING IS THE PROPERTY OF ANALOG DEVICES INC.
IT IS NOT TO BE REPRODUCED OR COPIED, IN WHOLE OR
IN PART, OR USED IN FURNISHING INFORMATION TO OTHERS,
OR FOR ANY OTHER PURPOSE DETRIMENTAL TO THE INTERESTS
OF ANALOG DEVICES.
THE EQUIPMENT SHOWN HEREON MAY BE PROTECTED BY PATENTS
OWNED OR CONTROLLED BY OWNED ANALOG DEVICES.

DESIGN VIEW	DRAWING NO.	REV
<DESIGN_VIEW>	02_059785	C

PTD ENGINEER	SIZE	SCALE	SHEET
A.UY	D	1:1	4 OF 5

REVISIONS			
REV	DESCRIPTION	DATE	APPROVED

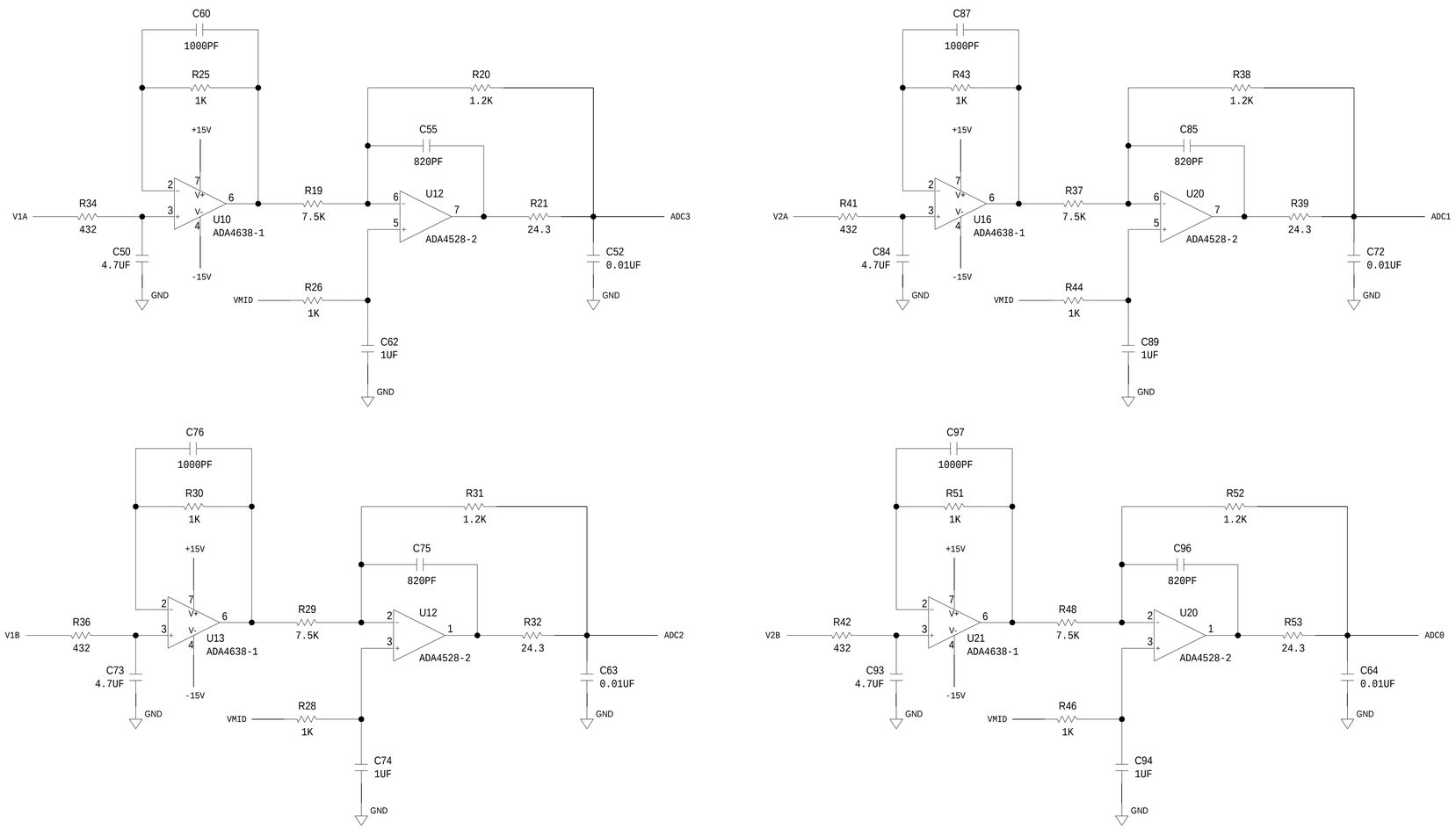

ADA4528-2 SUPPLY CONNECTIONS

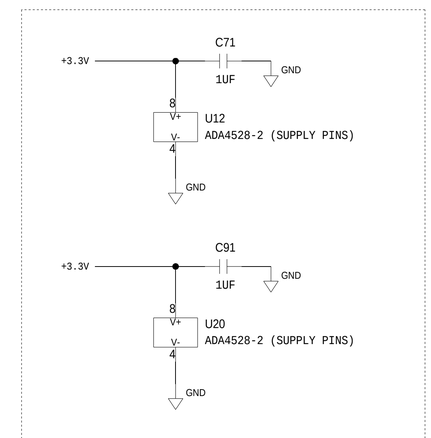

ADA4638-1 DECOUPLING CAPACITORS

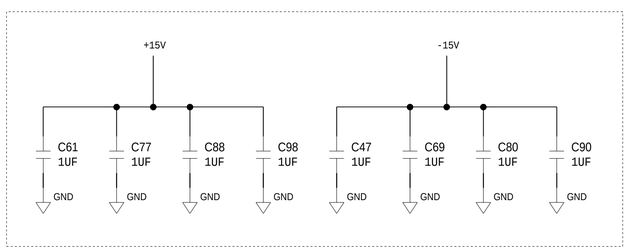

TRACK AND HOLD CIRCUITS

ANALOG DEVICES

THIS DRAWING IS THE PROPERTY OF ANALOG DEVICES INC.
IT IS NOT TO BE REPRODUCED OR COPIED, IN WHOLE OR
IN PART, OR USED IN FURNISHING INFORMATION TO OTHERS,
OR FOR ANY OTHER PURPOSE DETRIMENTAL TO THE INTERESTS
OF ANALOG DEVICES.
THE EQUIPMENT SHOWN HEREON MAY BE PROTECTED BY PATENTS
OWNED OR CONTROLLED BY OWNED ANALOG DEVICES.

SCHEMATIC

HW TYPE : Customer Evaluation Z
Product(s): ADuCM362
: AD8253

DESIGN VIEW	DRAWING NO.	REV
<DESIGN_VIEW>	02_059785	C

PTD ENGINEER	SIZE	SCALE	SHEET 5 OF 5
A.UY	D	1:1	